

■ Decorative radiators ■ Comfortable indoor ventilation ■ Heating and cooling ceilings ■ Industrial air cleaning

Zehnder EVO

The evolution in health, sustainability, comfort & energy efficiency for flexible space saving installations in residential buildings.

Product brochure

always the best climate

Sustainability

We are always working towards a more sustainable future.

Zehnder EVO is manufactured from expanded polypropylene and galvanized steel, making it fully recyclable and helping to reduce resource consumption and minimise environmental impact.

Intelligent design	4 – 5
Easy installation	6 – 7
High performance	8 – 9
Technical specification	
Zehnder EVO 2	10 – 17
Zehnder EVO 3 + 4	18 – 31
Zehnder EVO accessories	32 - 33

Zehnder EVO

Experience excellent healthy indoor air quality and optimal comfort with the slimline Zehnder EVO, a highly efficient heat recovery ventilation unit designed for flexible space-saving installation in residential buildings.

Intelligent Design

We innovate with intelligent features.

The **Zehnder EVO** marks a new generation of heat recovery unit, with intelligent features. One unit with many configuration possibilities, in an ultra-flat design.

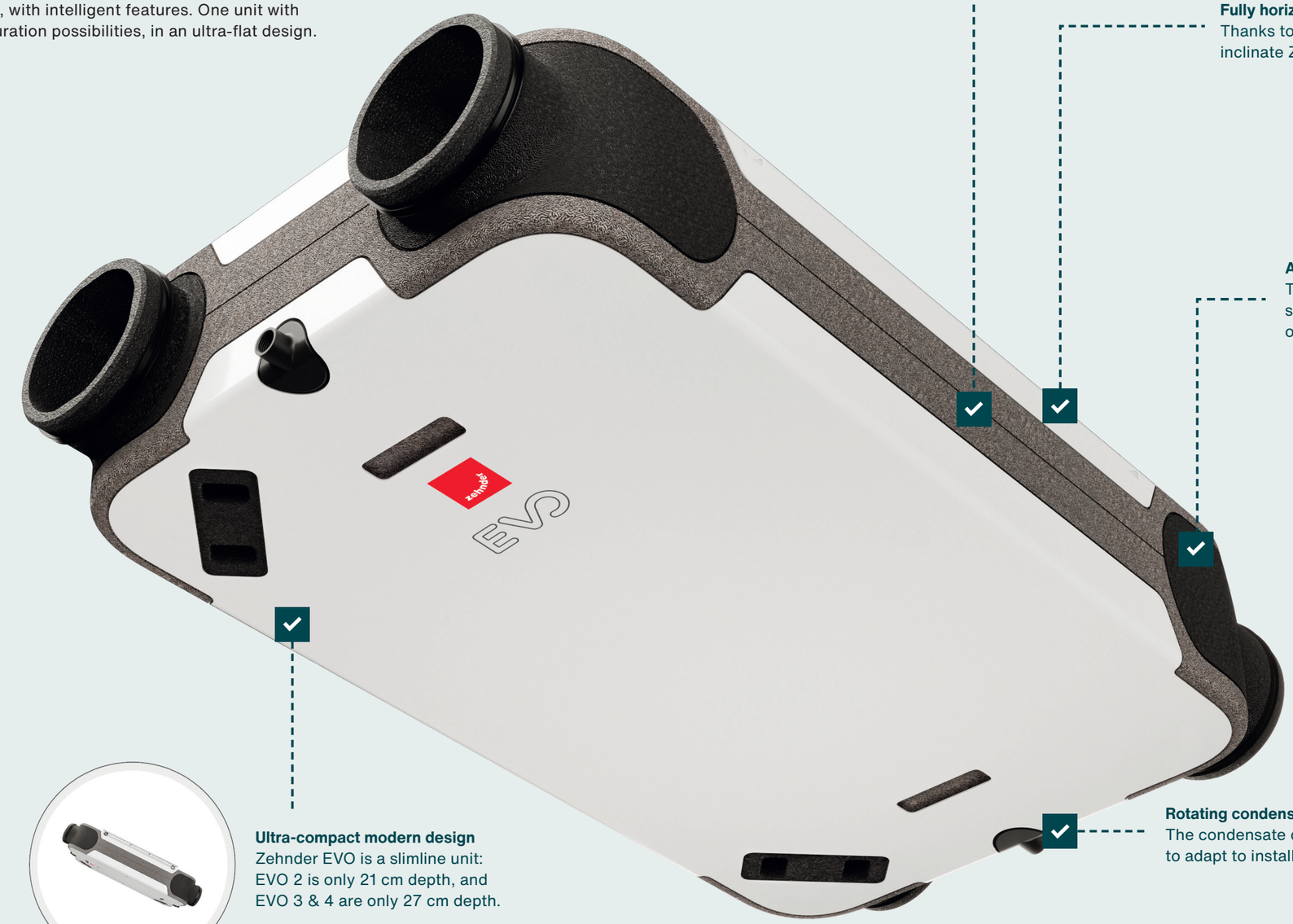

Acoustic comfort
4 silent block hocks and optimised centrifugal fans reduce noise and vibrations.



Fully horizontal installation
Thanks to its clever design, there is no need to inclinate Zehnder EVO for the condensate drain.

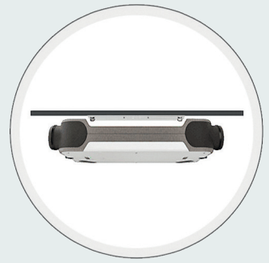

Automatic by-pass
The by-pass works perfectly in every season allowing EVO to achieve an optimal temperature inside the house.

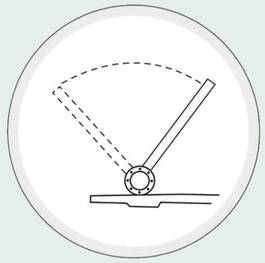

Ultra-compact modern design
Zehnder EVO is a slimline unit: EVO 2 is only 21 cm depth, and EVO 3 & 4 are only 27 cm depth.

Rotating condensation drains
The condensate drains can rotate 180° to adapt to installation requirements.

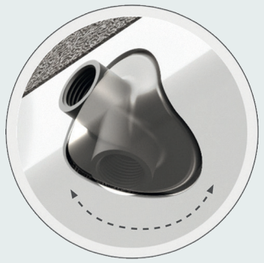

Products and airflow ranges:

- Zehnder EVO 2 up to 200 m³/h
- Zehnder EVO 3 up to 300 m³/h
- Zehnder EVO 4 up to 400 m³/h



Turnable connections
The turnable connections allow for various installation options and are easy and fast to configurate.



Quick & easy installation
The installation of the Zehnder EVO is intuitive and simple, and therefore timesaving.

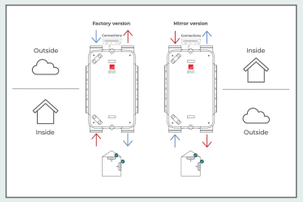

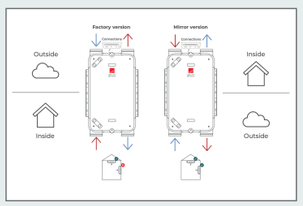

Flexible
The Zehnder EVO can be easily configured in a variety of ways at installation stage.

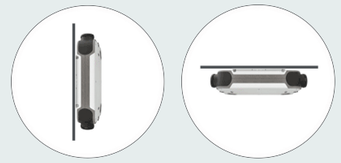

Vertical/Horizontal installation
The 2 supports enable easy installation on either the wall or ceiling.

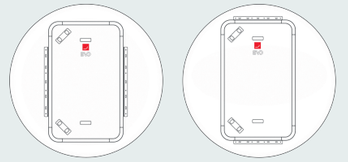

Orientation
Option to install the guides on any side of the unit thanks to the versatility of the silentblock brackets.

!

Connectivity

Connectivity available via KNX or Modbus.

Silentblock hooks
Simple fixing thanks to 4 anti-vibration brackets, minimising noise and vibration.

The Zehnder EVO is available in three different sizes as HRV or ERV with or without a preheater. Its straightforward installation makes it the ideal choice for any kind of ventilation project.

Easy installation

Smart features to simplify installation

High Performance

Advanced technologies and features support optimum energy efficiency. Low power consumption, maximum air tightness and constant flow able to achieve an energy efficiency of up to 90%



Effective seals
The connections are engineered for maximum tightness, featuring a double symmetrical joint that ensures a perfect seal between the unit and the duct.

Low power consumption
Optimised efficiency thanks to high-performance motors and exclusive technology, designed to significantly lower energy consumption.

Constant airflow
Advanced constant airflow technology with enhanced centrifugal fans and forward-oriented blades, ensure consistent airflow, exceptional acoustic comfort, lower energy consumption and improved air quality.

Lower pressure, better airflow
Zehnder EVO's aerodynamic design ensures improved airflow without increasing internal pressure.

Higher energy efficiency
The unit's innovative internal design incorporates a high-performance counterflow heat recovery exchanger, enabling efficient cross airflow for optimal performance.

Certificates
Zehnder EVO is recognised for its quality and innovation, backed by industry prestigious certifications such as Passivhaus, that reflect its trusted performance and design.

Zehnder EVO 2

Technical data

General features

The Zehnder EVO 2 has been developed as an ideal solution for apartments and small homes where efficient use of space is important.

Installation within a suspended ceiling is possible, even in small spaces, thanks to its compact design with minimal dimensions and rotatable spigots.

It can be left or right handed in addition to being ceiling or wall mounted.

It contains features such as its automatic true summer by-pass, high heat recovery efficiency and upgradable high grade filters providing a comfortable, healthy and energy-efficient indoor climate.

cool, temperate climate

CERTIFIED COMPONENT

Passive House Institute

Passive house certified

The Zehnder EVO 2 is a Passive House Institute certified component, recognising its high energy efficiency, airtightness, and proven performance in low-energy homes.

Learn more about EVO 2

Learn more about the Zehnder EVO 2

Read about the Zehnder EVO 2 and related solutions by scanning the QR code or visiting **www. zehnder.co.uk**



Key Benefits

- Ultra compact dimensions (L 1000mm x W 600mm x H 210 mm)
- 100% full and filtered summer bypass.
- Flexible installation options either ceiling or wall mountable.
- Tool free filter access.
- Constant-flow ventilation, quiet operation and low energy use.
- Monitoring and control via wired remote controls or wireless connectivity
- Just 210 mm thick, Zehnder EVO 2 is ideal for installation in false ceilings and what's more the inclination to enable condensate drainage is built-in to the unit as standard.
- Adjustable spigots for flexibility on duct connections.
- Tool free filter access.
- Volt free contact boost capability.
- RFZ wireless connectivity option.

Installation

Zehnder EVO 2 units are quick, easy and safe to install.

Just 21 cm deep, Zehnder EVO 2 units are ideal for installation in false ceilings and what's more they do not need to be inclined to enable condensate drainage. They can also be installed vertically on a wall, taking up very little space.

Their connections are adjustable, enabling easy, flexible hook-up to Zehnder distribution systems.

Zehnder EVO 2 units are also available in ERV version with enthalpy exchanger, which does not require a condensate drain.

The model with electric pre-heating meets the needs of any outdoor weather conditions.

Supervision and control

EVO units can be controlled via Zehnder EVO wireless remote controls or connected to KNX or ModBus building automation systems.

They combine perfectly with the Zehnder ComfoPost post-treatment systems.

Additionally, CO_2 and air relative humidity sensors are available for "on demand" automatic operation.

EVO Sense, RF LCD control



EVO Switch, RF control



Other benefits

- **Their outstanding performance enables their application for air exchange in apartments requiring flow rates up to 200 m³/h (Zehnder EVO 2).**
- **Silent operation in any residential context, thanks to centrifugal fans and particularly effective insulation.**
- **Low operating cost: the high-efficiency fans guarantee energy saving.**
- **Simple, safe air distribution:**

- thanks to DN 160 adjustable connections, units are easily connected to the Zehnder distribution system;
- Connections between components are airtight thanks to gasket seals in all fittings.
- Zehnder vents, grilles and valves guarantee optimal air supply and extraction.
- Zehnder's wide range of single or combined external grilles enables effective intake of external air and stale air exhaust in all conditions, while still meeting all facade design needs.

- **Achieving an ideal indoor climate is easy thanks to balanced flow and extract, with a choice of standard (HRV) or enthalpy (ERV) exchanger, with heat and humidity recovery.**
- **Comfort during even the coldest winters, with no interruption in air delivery and no risk of exchanger freezing with the Zehnder EVO PR models, with electric preheating.**

SAP PCDB

	SFP (W/l/s)		Efficiency (%)	
	2009	2012	2009	2012
K+1	0.57	0.62	90%	89%
K+2	0.60	0.67	89%	86%
K+3	0.66	0.84	87%	85%
K+4	0.77	1.06	85%	83%
K+5	0.97	1.34	84%	83%
K+6	1.04		83%	
K+7	1.26		83%	

SEC Class

A+

Based on average climate with local demand control

Passive House Certification

	Standard heat exchanger	Enthalpy heat exchanger
Air flow range	85–155 m³/h	85–155 m³/h
Heat recovery rate	HR = 84%	HR = 79%
Specific electric power	Pel,spec = 0.31 Wh/m³	Pel,spec = 0.3 Wh/m³
Humidity recovery		x = 61%

cool, temperate climate

CERTIFIED COMPONENT

Passive House Institute

Pressure Curve

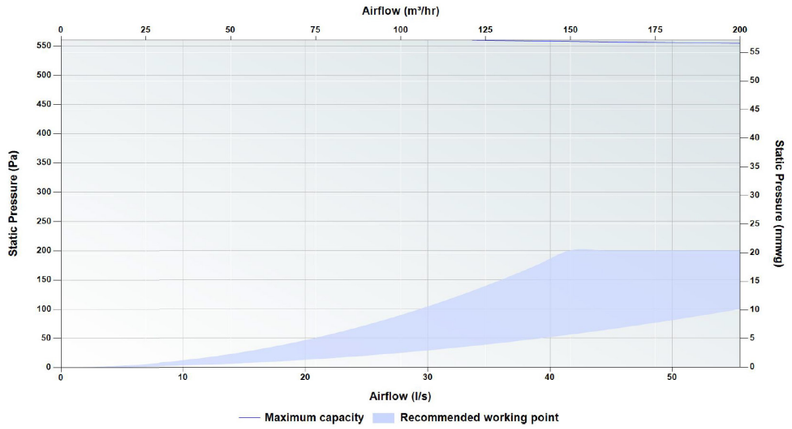

Sound Data

Speed	Test area	Octave Band (Hz) Sound Power Level, dB								dB(A)@ 3 m
		63	125	250	500	1000	2000	4000	8000	
20%	Casing	38.3	36.5	32.6	32.7	34.0	27.3	7.4	3.7	19.0
	Supply	64.9	51.3	44.4	42.0	36.9	24.0	11.2	3.0	
	Extract	55.5	46.5	40.4	32.0	26.7	11.9	1.8	6.0	
40%	Casing	49.5	50.5	45.3	45.1	47.4	39.8	29.5	21.1	32.1
	Supply	72.4	64.2	58.9	56.3	54.9	41.7	37.2	28.6	
	Extract	66.3	58.8	54.2	45.7	38.8	21.2	8.4	6.5	
60%	Casing	56.1	60.5	54.1	52.6	53.8	49.3	39.6	33.4	39.6
	Supply	77.2	70.4	67.8	63.8	61.6	52.2	48.5	42.7	
	Extract	73.8	68.6	64.0	54.1	45.3	28.3	16.8	7.0	
80%	Casing	57.4	62.1	57.7	57.3	57.1	57.1	45.1	41.9	44.6
	Supply	79.3	72.8	71.7	68.2	64.2	57.5	52.1	49.2	
	Extract	77.7	72.0	66.0	57.9	47.6	34.5	24.6	10.1	
100%	Casing	58.1	63.1	59.0	58.1	59.1	63.1	51.1	45.5	48.6
	Supply	78.7	74.6	74.7	69.2	66.2	60.1	53.6	50.1	
	Extract	78.3	77.0	67.2	58.2	48.0	38.9	27.0	10.7	

Tested according to BS EN 13141-7:2010. Supply and Extract showing induct sound power levels calculated in accordance with ISO 5135:1999. Casing dB(A) @ 3 m given as hemispherical.

Technical Specification

Weight	24 Kg
Ducting ø	External - 160 mm
Condensate connection ø	1/2 inch
Filter grade	Standard - ISO Coarse / ISO Coarse (G4 / G4) Optional - ISO Coarse / ISO ePM1 (G4 / F7)
Materials	Internal EPP / ABS External coated sheet steel
Supply voltage	230 V / single-phase / 50Hz
Maximum power consumption including / excluding pre-heater	1150 W / 150 W
Current draw including / excluding pre-heater	5.94 A / 1.44 A
Fuse rating including / excluding pre-heater	10 / 3 amp
Specific Fan Power	0.62 W/l/s
Heat Recovery Efficiency	89%
IP Rating	IP40

Dimensions

Height	210 mm
Width	600 - 700 mm
Depth	1000 - 1100 mm

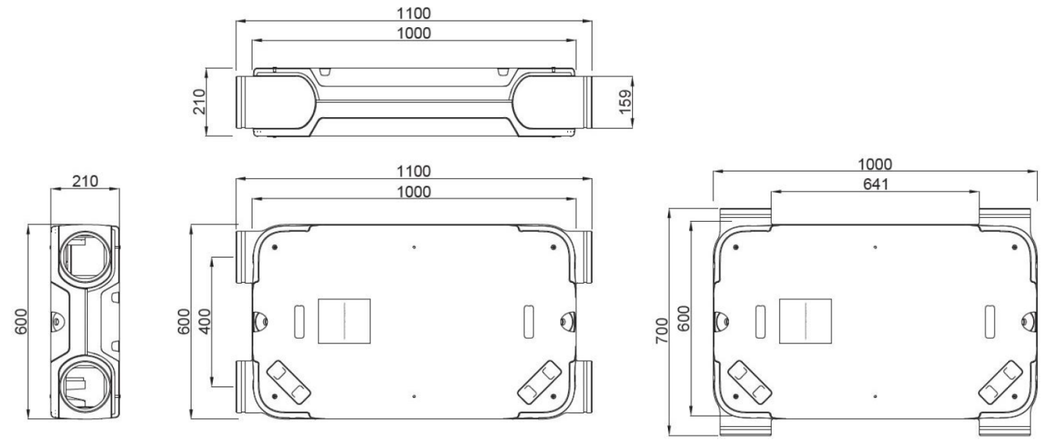

Air Direction/Connection

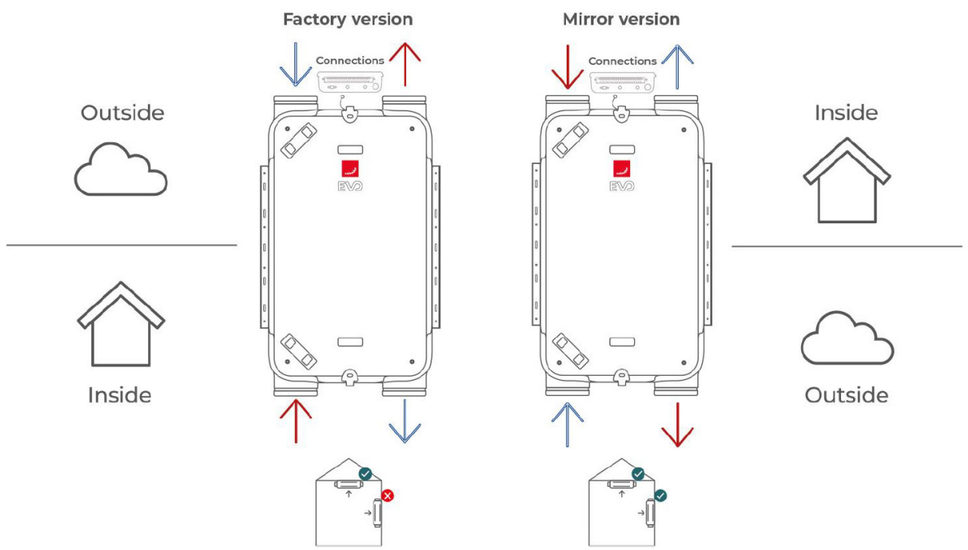

Wiring

Electrical connections should be carried out in accordance to IEE regulations by a qualified electrician. The unit is supplied with a flying lead for connection to the mains supply.

Two speed control via light switch

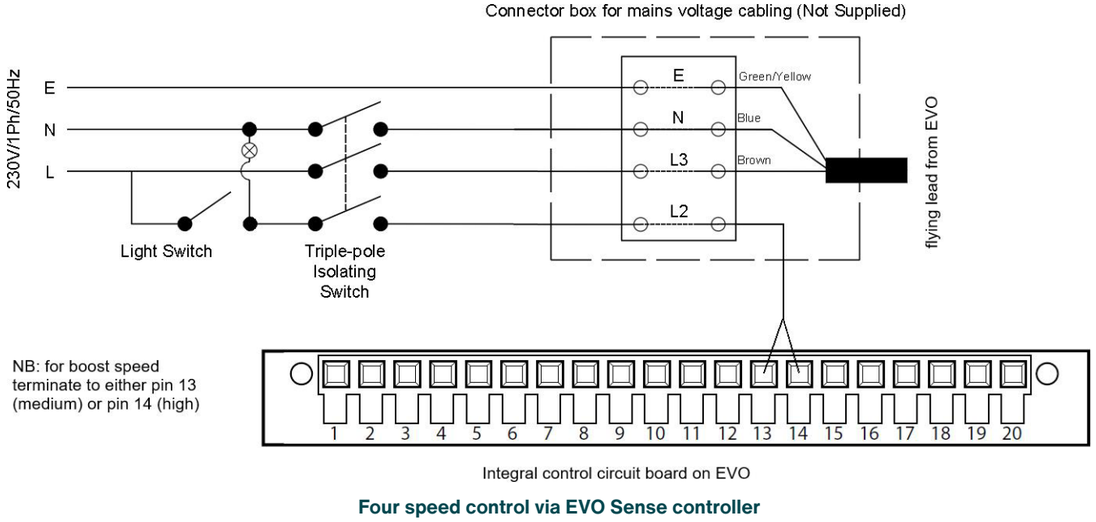

Four speed control via EVO Sense controller

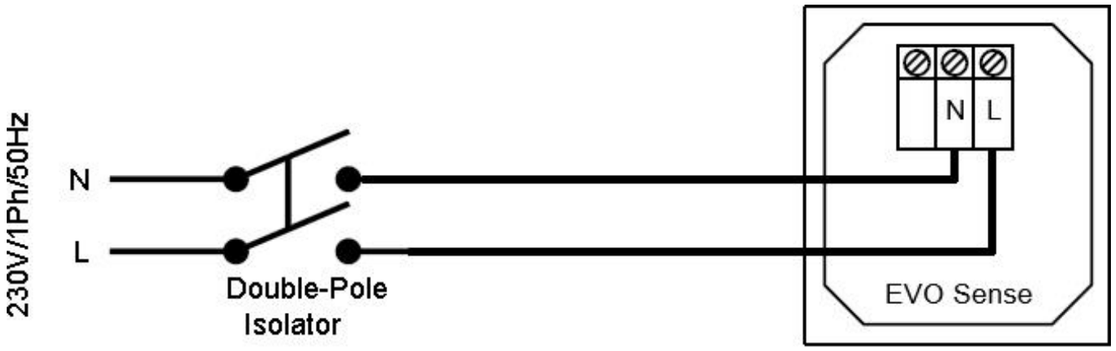



For use with

Our range of ComfoAir MVHR units can be used in conjunction with ComfoWell. The modular ComfoWell manifold can be combined with multiple circular connections for rigid round or semi-rigid connections. Along with filter boxes and attenuated manifold options, the ComfoWell is the perfect bespoke air distribution system for our ComfoAir MVHR units.

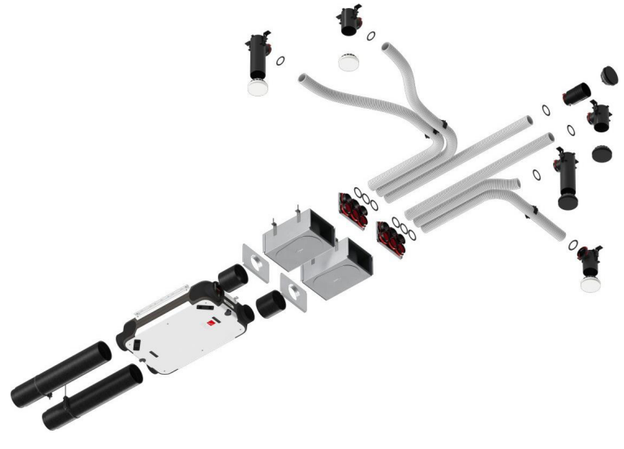

Scan for more info!

BIM/CAD Components

If you would like to download the BIM / CAD files for this or any other of our products then please visit our BIM library.

BIM/CAD file library

Installation Instructions

If you would like to download the installation files for this or any other of our products then please visit our website

Installation instructions

Consultant Specification

Specification

The unit shall consist of a body manufactured in powder coated sheet steel. The unit shall be fully insulated using high quality EPP to maintain excellent thermal characteristics and prevent shrinkage over time. It shall have EC motors with fully-closed bearings. The fans impellors should be low pressure centrifugal type with forward curved blades within ABS scroll housing and constant flow technology to ensure balanced airflow. The heat exchanger shall be a multi-plate, counter flow design constructed from aluminium and shall retain up to 89% of the temperature differential of outgoing air.

The unit shall contain filters which have been tested to a minimum of ISO Coarse (G4) standard with the option to upgrade to ISO ePM1 (F7). The filters shall be pleated to reduce the pressure drop and required cleaning time. The unit shall have rotatable 160 mm duct connections, and be suitable for vertical wall or horizontal ceiling mounting with the ability to allow factory or mirror hand configuration. Integrated preheater option shall be available to regulate its output to enable balanced ventilation with external air temperatures -10°C.

The unit shall have 100% full summer by-pass and provide filtered supply air 365 days of the year, even under bypass conditions. The unit shall contain a temperature sensor for each air stream to ensure correct and logical operation of the bypass damper by evaluating differential as well as absolute temperature to maximise the opportunity for free cooling. The unit shall control air flow to react to prolonged, sustained increased pressure drops to best achieve the commissioned flow rate even when filter degradation occurs.

The unit shall be constructed to have a removable cover to allow full maintenance access. The removable cover shall enable access to the supply/extract fan, heat exchanger and access to electrical connections. The motors shall be suitable for removal without the requirement for the unit to be removed from situ and be available as spare parts for a minimum of 10 years even after ceasing manufacture of the unit.

The unit shall conform to LVD and EMC standards and be CE Marked in addition to having an EU compliant energy rating label (SEC) with a minimum grade of A. The unit shall be manufactured by Zehnder.

Operation

The supply and extract unit shall be an EVO manufactured by Zehnder and shall be suitable for vertical wall or horizontal ceiling mounting in accordance with the specification.

The fresh filtered air from outside shall be supplied to each of the habitable rooms and pre-heated by the warm extract air from the wet areas, such as kitchen or bathroom, via the plastic counter flow heat exchanger. The unit shall vary its speed of the EC motors automatically when it receives a signal from one of the inbuilt sensors or via external switches.

The unit shall have the ability to adjust and commission the supply and extract motors independently via the separate controller. The motors shall both automatically adjust independently to the system pressure to achieve the input flow rate.

Controls

All EVO units shall contain the following functions within the unit pre-wired and factory fitted by the manufacturer:

- RF enabled as standard for use with remote controllers and sensors
- 100% variable supply and extract motor control
- 4 Variable speed flow rate set points
- Automatic filtered summer bypass
- Heat exchanger frost protection
- Fire stop contact
- Tool free filter access
- Switched live input
- Automatic passive boost for night time cooling

All EVO units shall contain the following options when combined with relevant ancillaries:

- BMS compatibility via Modbus protocol option (EVO Connect ModBus)
- BMS compatibility via KNX protocol option (EVO Connect ModBus + EVO Connect KNX)
- Pre-heater frost protection option
- Wireless input for 4 speed manual/auto controller with filter alert, required for commissioning (EVO Sense)
- Wireless input for single or multiple 3 speed manual controller with filter alert and temporary boost overrun (EVO Switch)
- Wireless input for single or multiple CO2 sensors with combined 3 speed manual controller (EVO CO2 sensor)
- Wireless input for single or multiple Humidity sensors with combined 3 speed manual controller (EVO Humidity sensor)

Article Numbers

Unit

Zehnder EVO 2	471 100 149
Zehnder EVO 2 with pre-heater, factory handed	471 100 150
Zehnder EVO 2 with pre-heater, mirror handed	471 100 151
Zehnder EVO 2 with enthalpy exchanger	471 100 152

Controls

Controls, Zehnder EVO Switch wireless controller for use with Zehnder EVO 2/3/4	471 100 017
Controls, Zehnder EVO Sense controller for use with Zehnder EVO 2/3/4	471 100 018
Controls, Zehnder EVO CO2 sensor for use with Zehnder EVO 2/3/4	471 100 022
Controls, Zehnder EVO Humidity sensor for use with Zehnder EVO 2/3/4	471 100 023
Controls, Zehnder EVO Connect ModBus for use with Zehnder EVO 2/3/4	471 100 020
Controls, Zehnder EVO Connect ModBus to KNX converter for use with Zehnder EVO 2/3/4	471 100 024

Filters

Filter for Zehnder EVO 2, ISO Coarse / ISO ePM1 (G4 / F7), 2 Pieces	471 100 064
Filter for Zehnder EVO 2, ISO Coarse (G4), 2 Pieces	471 100 065

Accessories

Heat exchanger for Zehnder EVO 2	471 100 034
Enthalpy exchanger for Zehnder EVO 2	471 100 035
Condensate waterless drain trap kit for Zehnder EVO 2/3/4	471 100 021
Steel ducting ø 160mm to ø 125mm reducer for Zehnder EVO, galvanised	471 100 101

Zehnder EVO 3 & EVO 4

Technical data

General features

Zehnder EVO 3 and EVO 4 are extremely high efficiency dual-flow controlled mechanical ventilation units with constant flow rate. Their compact design and slender thickness (just 27 cm) make Zehnder EVO 3 and EVO 4 ideal for mounting horizontal on false ceilings, in both new builds and renovation project; they can also be installed vertically on walls.

Units are available in standard heat exchanger (HRV) or enthalpy exchanger (ERV) versions, with or without electric preheating. They can be controlled via a remote control unit or a building management system.

Zehnder EVO 3 and EVO 4 combine to perfection with the Zehnder ComfoPost post-treatment systems. The choice of configurations available, and the wide range of optional filters, make Zehnder EVO 3 and Zehnder EVO 4 the ideal units for maintaining optimal indoor comfort all year round.

cool, temperate climate
CERTIFIED COMPONENT
Passive House Institute

Passive house certified

The Zehnder EVO 3 and EVO 4 are Passive House Institute certified components, recognising their high efficiency, airtightness, and proven performance in low-energy homes.

Learn more about the Zehnder EVO 3 & 4

Read about the Zehnder EVO 3 and 4 and related solutions by scanning the QR code or visiting **www. zehnder.co.uk**

Learn more about EVO



Characteristics

- Quick, straightforward, flexible installation horizontally in a ceiling or vertically on a wall, with no need to add an additional inclination to the unit to condensate drain. The handing can easily be changed during installation
- Constant-flow ventilation, quiet operation and low energy use
- High recovery efficiency and wide range of filters
- Automatic 100% bypass
- Monitoring and control via wired remote controls or wireless connectivity
- Can be combined with the Zehnder ComfoDew or ComfoPost post-treatment systems and the Zehnder Multi Control device
- Available in standard heat exchanger (HRV) or enthalpy exchanger (ERV) versions, with or without electric preheating

Installation

Zehnder EVO 3 and EVO 4 are quick, easy and safe to install.

Just 27 cm thick, Zehnder EVO 3 and Zehnder EVO 4 are ideal for installation in false ceilings and what's more they do not need to be inclined to enable condensate drainage. They can also be installed vertically on a wall, taking up very little space.

Their connections are adjustable, enabling easy, flexible connection to Zehnder distribution system.

Zehnder EVO 3 and EVO 4 are also available in ERV version with enthalpy exchanger, which does not require a condensate drain.

The model with electric pre-heating can meet the needs of any outdoor weather conditions.

Supervision and control

EVO units can be controlled via Zehnder EVO wireless remote controls or connected to KNX or ModBus building automation systems.

These units combine to perfection with the Zehnder ComfoPost post-treatment systems.

Last but not least, CO_2 and air relative humidity sensors are available for "on demand" automatic operation.

EVO Sense, RF LCD control



EVO Switch, RF control



Other benefits

- Their outstanding performance enables their application for air exchange in apartments requiring flow rates up to 300 m^3/h (Zehnder EVO 3) or 400 m^3/h (Zehnder EVO 4).
- Silent operation in any residential context, thanks to centrifugal fans and particularly effective insulation.
- Low operating cost: the high-efficiency fans guarantee energy saving.
- Simple, safe air distribution:
  - thanks to DN 160 adjustable connections, units are easily connected to the Zehnder distribution system;
  - connections between components are airtight thanks to gasket seals in all fittings.
  - Zehnder vents, grilles and valves guarantee optimal air supply and extraction.
  - Zehnder's wide range of single or combined external grilles enables effective intake of external air and stale air exhaust in all conditions, while still meeting all facade design needs.
- Achieving an ideal indoor climate is easy thanks to balanced supply and extract, with a choice of standard (HRV) or enthalpy (ERV) exchanger, with heat and humidity recovery.
- Comfort during even the coldest winters, with no interruption in air delivery and no risk of exchanger freezing with the Zehnder EVO PR models, with electric preheating.

SAP PCDB

	SFP (W/l/s)		Efficiency (%)	
	2009	2012	2009	2012
K+1	0.51	0.50	91%	90%
K+2	0.47	0.54	90%	88%
K+3	0.49	0.65	89%	87%
K+4	0.57	0.80	87%	86%
K+5	0.66	0.97	86%	85%
K+6	0.79	1.25	86%	84%
K+7	0.92		85%	

SEC Class

A+

Based on average climate with local demand control

Passive House Certification

	Standard heat exchanger
Air flow range	116–231 m^3/h
Heat recovery rate	HR = 81%
Specific electric power	Pel,spec = 0.28 Wh/m^3
Humidity recovery	

cool, temperate climate

CERTIFIED COMPONENT

Passive House Institute

Pressure Curve

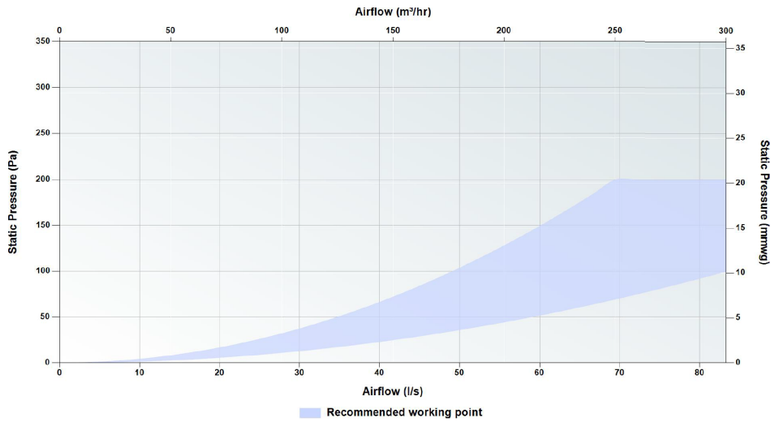

Sound Data

Speed	Test area	Octave Band (Hz) Sound Power Level, dB							dB(A)@ 3 m
			125	250	500	1000	2000	4000	8000	
20%	Casing		29.3	31.7	30.0	21.8	22.8	31.3	30.3	18.1
	Supply		58.4	55.7	54.2	36.6	28.9	18.0	6.6	
	Extract		44.8	37.8	36.1	21.7	9.1			
40%	Casing		42.7	38.2	34.3	35.0	28.2	26.1	28.5	21.4
	Supply		66.4	56.9	53.5	47.5	36.8	30.4	22.8	
	Extract		50.5	45.2	38.7	33.2	18.1			
60%	Casing		49.9	46.3	41.5	43.8	37.0	30.9	29.8	29.3
	Supply		73.4	63.8	59.9	55.1	45.6	41.8	36.6	
	Extract		58.0	53.7	45.8	41.4	27.3			
80%	Casing		55.0	52.9	47.8	49.4	44.6	38.3	33.8	35.4
	Supply		78.1	70.7	66.3	60.3	53.2	49.7	46.0	
	Extract		63.9	60.4	52.3	46.7	34.5			
100%	Casing		62.0	55.0	49.4	53.1	46.7	40.6	40.3	38.6
	Supply		79.4	71.6	65.8	64.3	57.3	51.9	49.1	
	Extract		64.4	62.4	53.2	49.5	37.6			

Tested according to BS EN 13141-7:2010. Supply and Extract showing induct sound power levels calculated in accordance with ISO 5135:1999. Casing dB(A) @ 3 m given as hemispherical.

Technical Specification

Weight	36 Kg
Ducting ø	Internal - 160 mm
Condensate connection ø	1/2 inch
Filter grade	Standard - ISO Coarse / ISO Coarse (G4 / G4) Optional - ISO Coarse / ISO ePM1 (G4 / F7)
Materials	Internal EPP / ABS External coated sheet steel
Supply voltage	230 V / single-phase / 50Hz
Maximum power consumption including / excluding pre-heater	1168 W / 168 W
Current draw including / excluding pre-heater	5.82 A / 1.42 A
Fuse rating including / excluding pre-heater	10 / 3 amp
Specific Fan Power	0.5 W/l/s
Heat Recovery Efficiency	90%
IP Rating	IP40

Dimensions

Height	269 mm
Width	600 - 700 mm
Depth	1160 - 1260 mm

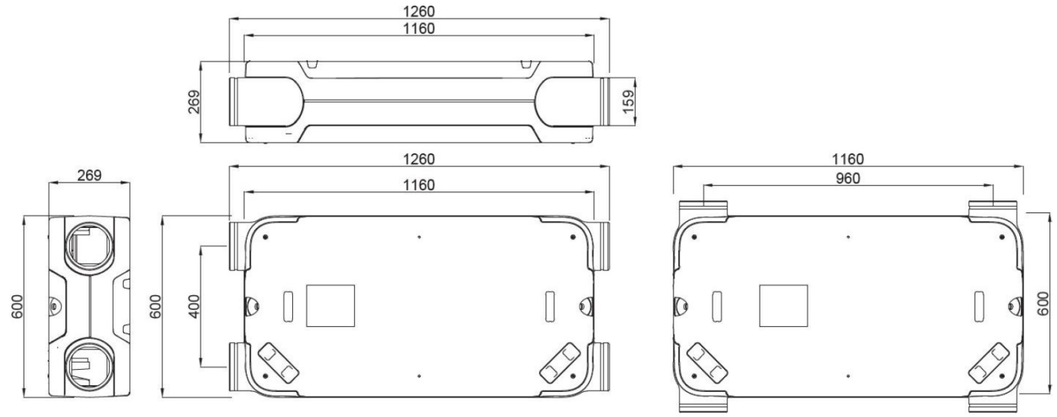

Air Direction/Connection

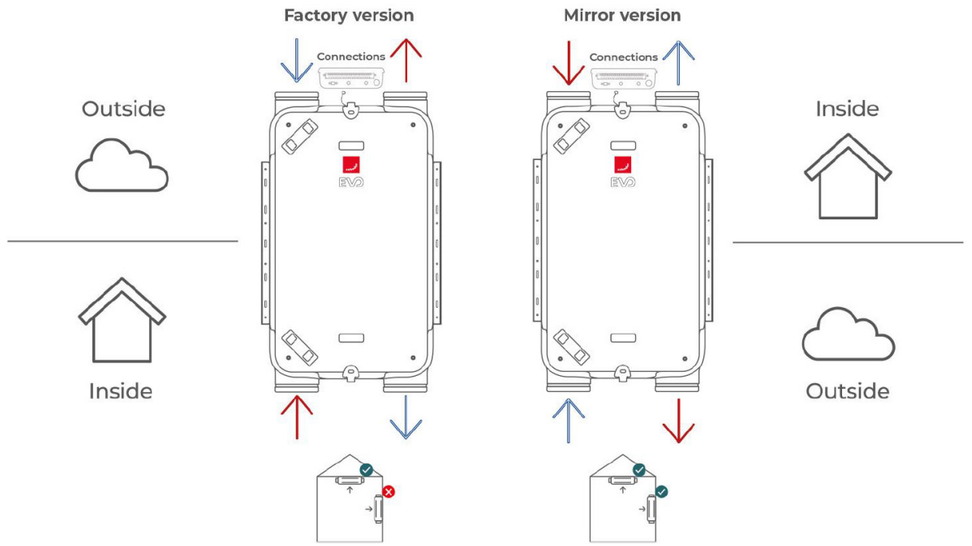

Wiring

Electrical connections should be carried out in accordance to IEE regulations by a qualified electrician. The unit is supplied with a flying lead for connection to the mains supply.

Two speed control via light switch

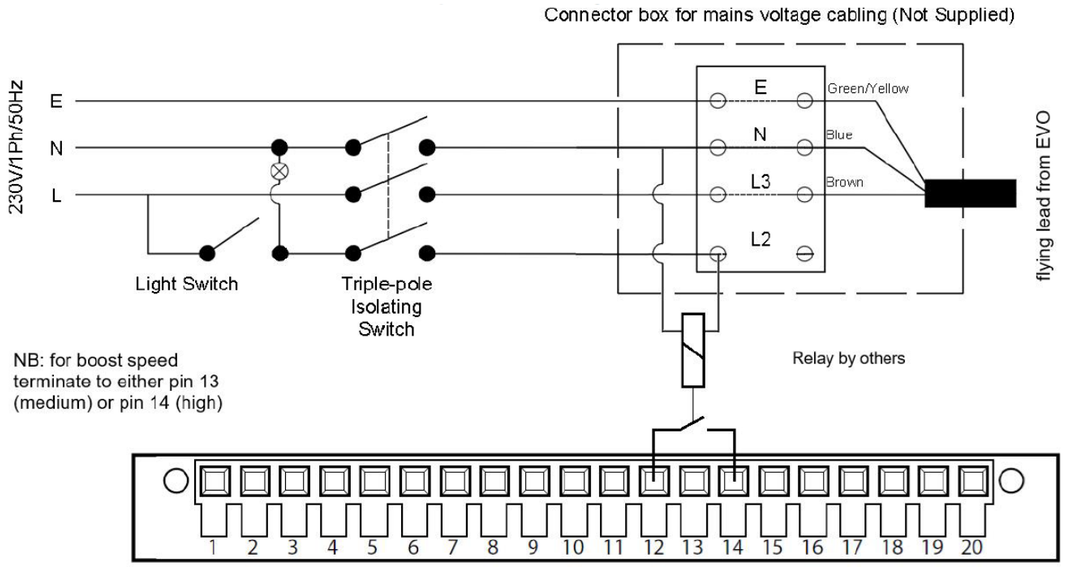

Integral control circuit board on EVO

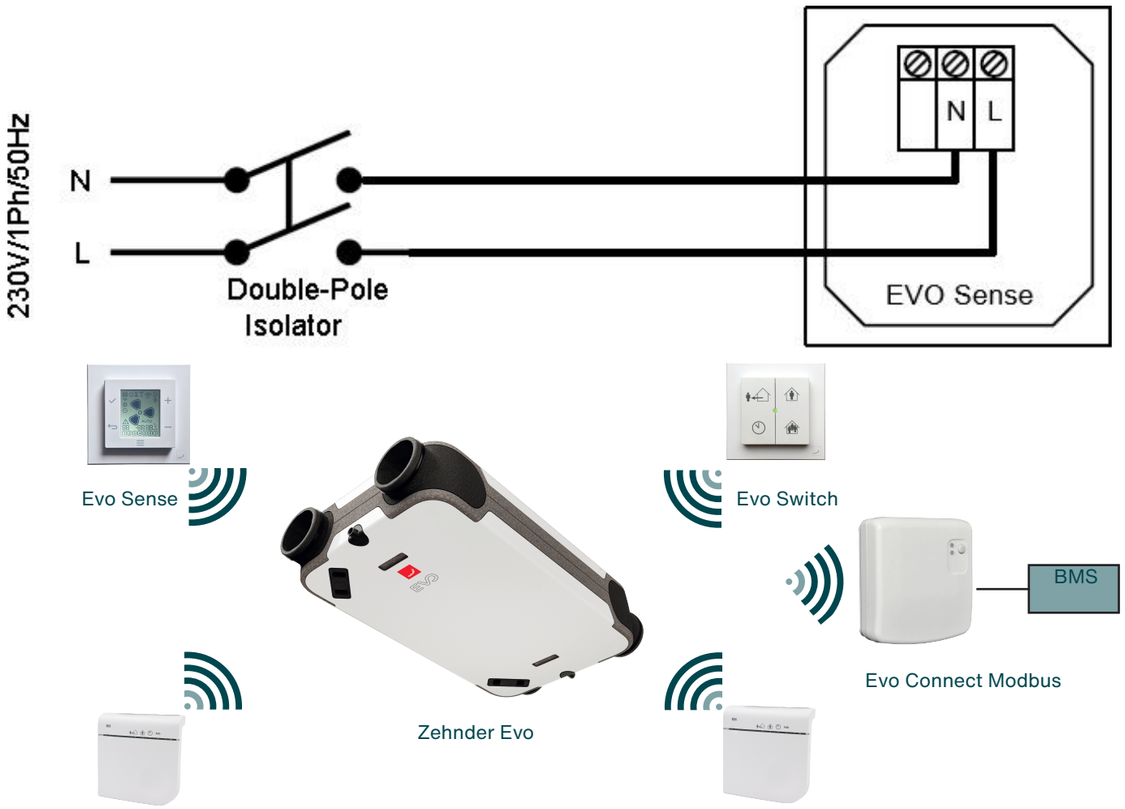

Article Numbers

Unit

Zehnder EVO 3	471 100 161
Zehnder EVO 3 with pre-heater, factory handed	471 100 153
Zehnder EVO 3 with pre-heater, mirror handed	471 100 154
Zehnder EVO 3 with enthalpy exchanger	471 100 162

Controls

Controls, Zehnder EVO Switch wireless controller for use with Zehnder EVO 2/3/4	471 100 017
Controls, Zehnder EVO Sense controller for use with Zehnder EVO 2/3/4	471 100 018
Controls, Zehnder EVO CO2 sensor for use with Zehnder EVO 2/3/4	471 100 022
Controls, Zehnder EVO Humidity sensor for use with Zehnder EVO 2/3/4	471 100 023
Controls, Zehnder EVO Connect ModBus for use with Zehnder EVO 2/3/4	471 100 020
Controls, Zehnder EVO Connect ModBus to KNX converter for use with Zehnder EVO 2/3/4	471 100 024

Filters

Filter for Zehnder EVO 3/4, ISO Coarse / ISO ePM1 (G4 / F7), 2 Pieces	471 100 067
Filter for Zehnder EVO 3/4, ISO Coarse (G4), 2 Pieces	471 100 066

Accessories

Heat exchanger for Zehnder EVO 3/4	471 100 052
Enthalpy exchanger for Zehnder EVO 3/4	471 100 053
Condensate waterless drain trap kit for Zehnder EVO 2/3/4	471 100 021

For use with

Our range of ComfoAir MVHR units can be used in conjunction with ComfoWell. The modular ComfoWell manifold can be combined with multiple circular connections for rigid round or semi-rigid connections. Along with filter boxes and attenuated manifold options, the ComfoWell is the perfect bespoke air distribution system for our ComfoAir MVHR units.

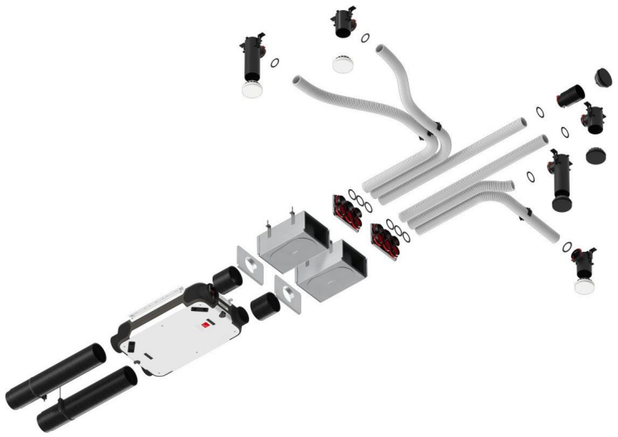

Scan for more info!

BIM/CAD Components

If you would like to download the BIM / CAD files for this or any other of our products then please visit our BIM library.

BIM/CAD file library

Installation Instructions

If you would like to download the installation files for this or any other of our products then please visit our website

Installation instructions

Consultant Specification

Specification

The unit shall consist of a body manufactured in powder coated sheet steel. The unit shall be fully insulated using high quality EPP to maintain excellent thermal characteristics and prevent shrinkage over time. It shall have EC motors with fully-closed bearings. The fans impellors should be low pressure centrifugal type with forward curved blades within metal scroll housing and constant flow technology to ensure balanced airflow. The heat exchanger shall be a multi-plate, counter flow design constructed from aluminium and shall retain up to 90% of the temperature differential of outgoing air.

The unit shall contain filters which have been tested to a minimum of ISO Coarse (G4) standard with the option to upgrade to ISO ePM1 (F7). The filters shall be pleated to reduce the pressure drop and required cleaning time. The unit shall have rotatable 160 mm duct connections, and be suitable for vertical wall or horizontal ceiling mounting with the ability to allow factory or mirror hand configuration. Integrated preheater option shall be available to regulate its output to enable balanced ventilation with external air temperatures -10°C.

The unit shall have 100% full summer by-pass and provide filtered supply air 365 days of the year, even under bypass conditions. The unit shall contain a temperature sensor for each air stream to ensure correct and logical operation of the bypass damper by evaluating differential as well as absolute temperature to maximise the opportunity for free cooling. The unit shall control air flow to react to prolonged, sustained increased pressure drops to best achieve the commissioned flow rate even when filter degradation occurs.

The unit shall be constructed to have a removable cover to allow full maintenance access. The removable cover shall enable access to the supply/extract fan, heat exchanger and access to electrical connections. The motors shall be suitable for removal without the requirement for the unit to be removed from situ and be available as spare parts for a minimum of 10 years even after ceasing manufacture of the unit. The unit shall conform to LVD and EMC standards and be CE Marked in addition to having an EU compliant energy rating label (SEC) with a minimum grade of A. The unit shall be manufactured by Zehnder.

Operation

The supply and extract unit shall be an EVO manufactured by Zehnder and shall be suitable for vertical wall or horizontal ceiling mounting in accordance with the specification. The fresh filtered air from outside shall be supplied to each of the habitable rooms and pre-heated by the warm extract air from the wet areas, such as kitchen or bathroom, via the plastic counter flow heat exchanger. The unit shall vary its speed of the EC motors automatically when it receives a signal from one of the inbuilt sensors or via external switches. The unit shall have the ability to adjust and commission the supply and extract motors independently via the separate controller. The motors shall both automatically adjust independently to the system pressure to achieve the input flow rate.

Controls

All EVO units shall contain the following functions within the unit pre-wired and factory fitted by the manufacturer:

- RF enabled as standard for use with remote controllers and sensors
- 100% variable supply and extract motor control
- 4 Variable speed flow rate set points
- Automatic filtered summer bypass
- Heat exchanger frost protection
- Fire stop contact
- Tool free filter access
- Switched live input
- Automatic passive boost for night time cooling

All EVO units shall contain the following options when combined with relevant ancillaries:

- BMS compatibility via Modbus protocol option (EVO Connect ModBus)
- BMS compatibility via KNX protocol option (EVO Connect ModBus + EVO Connect KNX)
- Pre-heater frost protection option
- Wireless input for 4 speed manual/auto controller with filter alert, required for commissioning (EVO Sense)
- Wireless input for single or multiple 3 speed manual controller with filter alert and temporary boost overrun (EVO Switch)
- Wireless input for single or multiple CO2 sensors with combined 3 speed manual controller (EVO CO2 sensor)
- Wireless input for single or multiple Humidity sensors with combined 3 speed manual controller (EVO Humidity sensor)

SAP PCDB

	SFP (W/l/s)		Efficiency (%)	
	2009	2012	2009	2012
K+1	-	-	-	-
K+2	-	0.71	-	89%
K+3	0.65	0.74	89%	87%
K+4	0.72	0.91	88%	86%
K+5	0.78	1.07	87%	85%
K+6	0.91	1.30	86%	85%
K+7	1.03	1.56	85%	84%

SEC Class

A+

Based on average climate with local demand control

Passive House Certification

	Standard heat exchanger
Air flow range	139–322 m³/h
Heat recovery rate	HR = 80%
Specific electric power	Pel,spec = 0.37 Wh/m³

cool, temperate climate

CERTIFIED COMPONENT

Passive House Institute

Pressure Curve

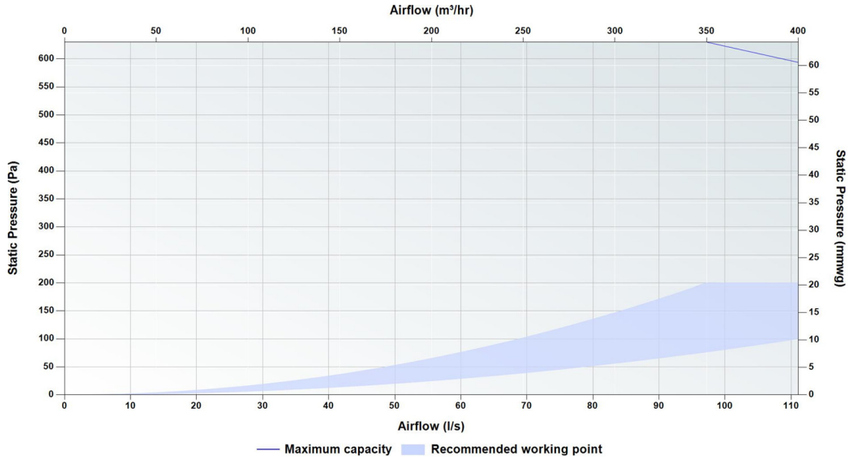

Sound Data

Speed	Test area	Octave Band (Hz) Sound Power Level, dB							dB(A)@ 3 m
		125	250	500	1000	2000	4000	8000	
40%	Casing	38.5	36.6	34.2	35.6	27.6	19.1	14.3	20.6
	Supply	59.6	55.2	52.4	45.2	34.8	28.4	21.6	
	Extract	49.4	42.5	37.4	30.8	17.1	7.2	7.9	
60%	Casing	48.0	47.6	43.1	47.9	40.5	34.2	29.1	32.4
	Supply	67.2	64.5	61.7	56.1	47.7	43.8	40.2	
	Extract	59.4	54.1	47.7	42.2	30.6	19.9	14.3	
80%	Casing	54.8	55.4	50.3	55.5	49.6	44.1	39.9	40.4
	Supply	72.1	70.8	68.3	62.4	57.0	53.3	51.6	
	Extract	66.1	62.0	55.1	48.9	40.1	30.4	22.9	
100%	Casing	58.9	59.8	55.7	58.4	55.2	48.8	46.6	44.5
	Supply	74.2	74.1	72.2	64.1	62.8	56.9	56.0	
	Extract	69.6	65.9	59.6	50.9	45.3	38.5	33.6	

Tested according to BS EN 13141-7:2010. Supply and Extract showing induct sound power levels calculated in accordance with ISO 5135:1999. Casing dB(A) @ 3 m given as hemispherical.

Technical Specification

Weight	39 Kg
Ducting ø	Internal - 160 mm
Condensate connection ø	1/2 inch
Filter grade	Standard - ISO Coarse / ISO Coarse (G4 / G4) Optional - ISO Coarse / ISO ePM1 (G4 / F7)
Materials	Internal EPP / ABS External coated sheet steel
Supply voltage	230 V / single-phase / 50Hz
Maximum power consumption including / excluding pre-heater	1370 W / 370 W
Current draw including / excluding pre-heater	7.62 A / 3.42 A
Fuse rating including / excluding pre-heater	10 / 6 amp
Specific Fan Power	0.71 W/l/s
Heat Recovery Efficiency	89%
IP Rating	IP40

Dimensions

Height	269 mm
Width	600 - 700 mm
Depth	1160 - 1260 mm

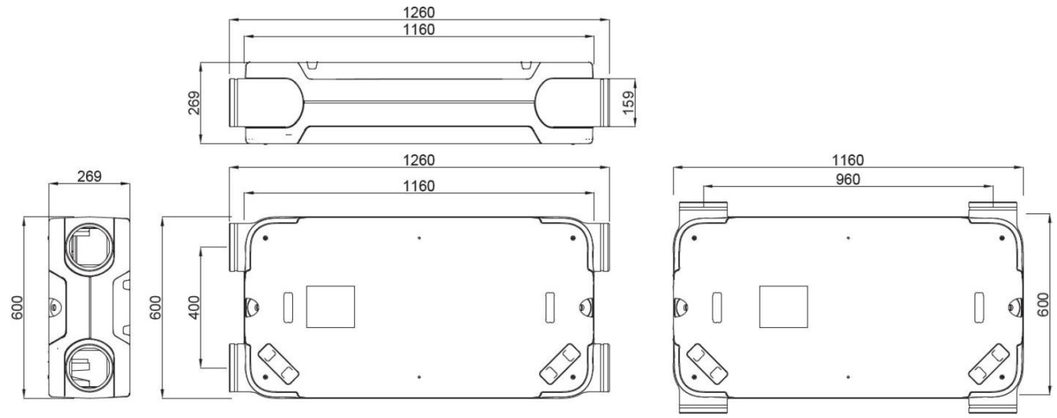

Air Direction/Connection

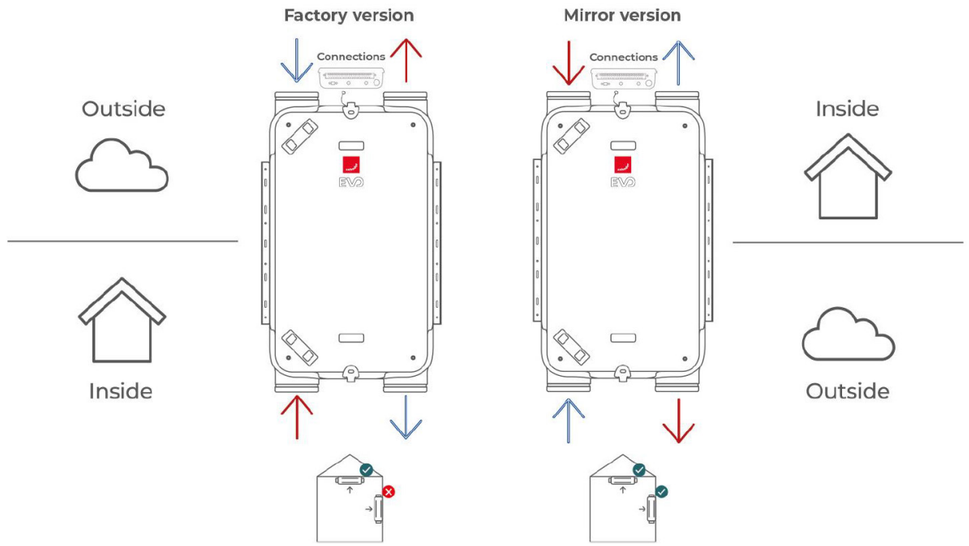

Wiring

Electrical connections should be carried out in accordance to IEE regulations by a qualified electrician. The unit is supplied with a flying lead for connection to the mains supply.

Two speed control via light switch

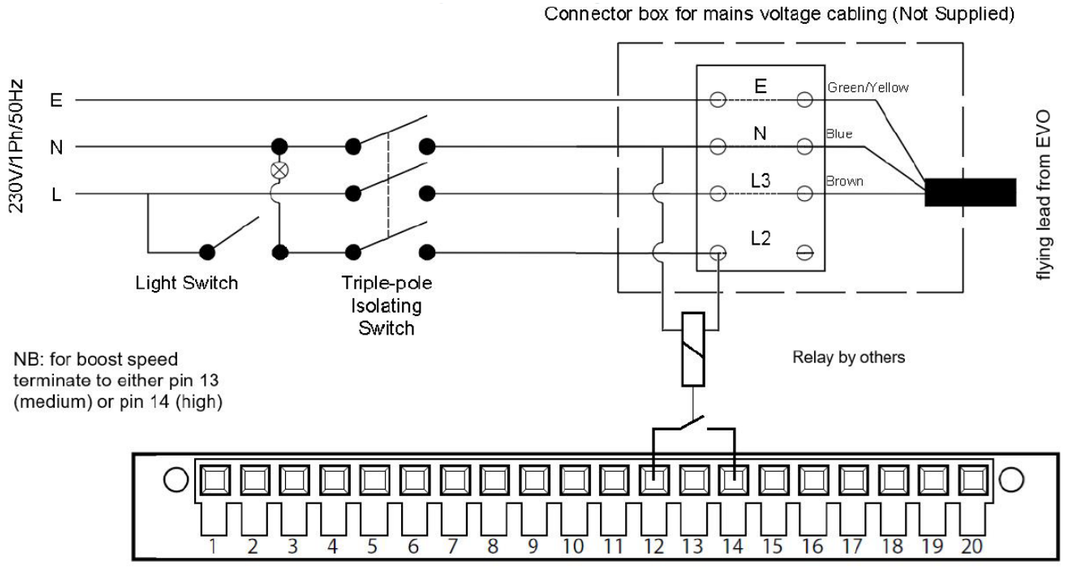

Integral control circuit board on EVO

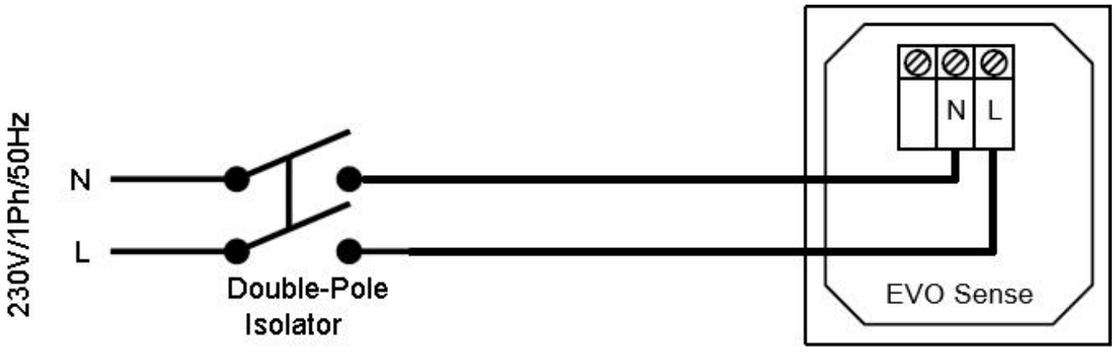



Article Numbers

Unit

Zehnder EVO 4	471 100 163
Zehnder EVO 4 with pre-heater, factory handed	471 100 155
Zehnder EVO 4 with pre-heater, mirror handed	471 100 156
Zehnder EVO 4 with enthalpy exchanger	471 100 164

Controls

Controls, Zehnder EVO Switch wireless controller for use with Zehnder EVO 2/3/4	471 100 017
Controls, Zehnder EVO Sense controller for use with Zehnder EVO 2/3/4	471 100 018
Controls, Zehnder EVO CO2 sensor for use with Zehnder EVO 2/3/4	471 100 022
Controls, Zehnder EVO Humidity sensor for use with Zehnder EVO 2/3/4	471 100 023
Controls, Zehnder EVO Connect ModBus for use with Zehnder EVO 2/3/4	471 100 020
Controls, Zehnder EVO Connect ModBus to KNX converter for use with Zehnder EVO 2/3/4	471 100 024

Filters

Filter for Zehnder EVO 3/4, ISO Coarse / ISO ePM1 (G4 / F7), 2 Pieces	471 100 067
Filter for Zehnder EVO 3/4, ISO Coarse (G4), 2 Pieces	471 100 066

Accessories

Heat exchanger for Zehnder EVO 3/4	471 100 052
Enthalpy exchanger for Zehnder EVO 3/4	471 100 053
Condensate waterless drain trap kit for Zehnder EVO 2/3/4	471 100 021

For use with

Our range of EVO units can be used in conjunction with ComfoWell. The modular ComfoWell manifold can be combined with multiple circular connections for rigid round or semi-rigid connections. Along with filter boxes and attenuated manifold options, the ComfoWell is the perfect bespoke air distribution system for our EVO units.

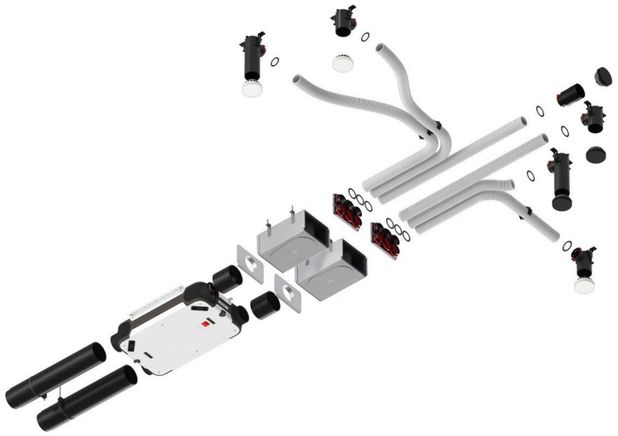

Scan for more info!

BIM/CAD Components

If you would like to download the BIM / CAD files for this or any other of our products then please visit our BIM library.

BIM/CAD file library

Installation Instructions

If you would like to download the installation files for this or any other of our products then please visit our website

Installation instructions

Consultant Specification

Specification

The unit shall consist of a body manufactured in powder coated sheet steel. The unit shall be fully insulated using high quality EPP to maintain excellent thermal characteristics and prevent shrinkage over time. It shall have EC motors with fully-closed bearings. The fans impellors should be low pressure centrifugal type with forward curved blades within metal scroll housing and constant flow technology to ensure balanced airflow. The heat exchanger shall be a multi-plate, counter flow design constructed from aluminium and shall retain up to 90% of the temperature differential of outgoing air.

The unit shall contain filters which have been tested to a minimum of ISO Coarse (G4) standard with the option to upgrade to ISO ePM1 (F7). The filters shall be pleated to reduce the pressure drop and required cleaning time. The unit shall have rotatable 160 mm duct connections, and be suitable for vertical wall or horizontal ceiling mounting with the ability to allow factory or mirror hand configuration. Integrated preheater option shall be available to regulate its output to enable balanced ventilation with external air temperatures -10°C.

The unit shall have 100% full summer by-pass and provide filtered supply air 365 days of the year, even under bypass conditions. The unit shall contain a temperature sensor for each air stream to ensure correct and logical operation of the bypass damper by evaluating differential as well as absolute temperature to maximise the opportunity for free cooling. The unit shall control air flow to react to prolonged, sustained increased pressure drops to best achieve the commissioned flow rate even when filter degradation occurs.

The unit shall be constructed to have a removable cover to allow full maintenance access. The removable cover shall enable access to the supply/extract fan, heat exchanger and access to electrical connections. The motors shall be suitable for removal without the requirement for the unit to be removed from situ and be available as spare parts for a minimum of 10 years even after ceasing manufacture of the unit. The unit shall conform to LVD and EMC standards and be CE Marked in addition to having an EU compliant energy rating label (SEC) with a minimum grade of A. The unit shall be manufactured by Zehnder.

Operation

The supply and extract unit shall be an EVO manufactured by Zehnder and shall be suitable for vertical wall or horizontal ceiling mounting in accordance with the specification. The fresh filtered air from outside shall be supplied to each of the habitable rooms and pre-heated by the warm extract air from the wet areas, such as kitchen or bathroom, via the plastic counter flow heat exchanger. The unit shall vary its speed of the EC motors automatically when it receives a signal from one of the inbuilt sensors or via external switches. The unit shall have the ability to adjust and commission the supply and extract motors independently via the separate controller. The motors shall both automatically adjust independently to the system pressure to achieve the input flow rate.

Controls

All EVO units shall contain the following functions within the unit pre-wired and factory fitted by the manufacturer:

- RF enabled as standard for use with remote controllers and sensors
- 100% variable supply and extract motor control
- 4 Variable speed flow rate set points
- Automatic filtered summer bypass
- Heat exchanger frost protection
- Fire stop contact
- Tool free filter access
- Switched live input
- Automatic passive boost for night time cooling

All EVO units shall contain the following options when combined with relevant ancillaries:

- BMS compatibility via Modbus protocol option (EVO Connect ModBus)
- BMS compatibility via KNX protocol option (EVO Connect ModBus + EVO Connect KNX)
- Pre-heater frost protection option
- Wireless input for 4 speed manual/auto controller with filter alert, required for commissioning (EVO Sense)
- Wireless input for single or multiple 3 speed manual controller with filter alert and temporary boost overrun (EVO Switch)
- Wireless input for single or multiple CO2 sensors with combined 3 speed manual controller (EVO CO2 sensor)
- Wireless input for single or multiple Humidity sensors with combined 3 speed manual controller (EVO Humidity sensor)

Controls

EVO Switch

Product code: 471 100 017



The Zehnder EVO Switch is a wireless multi position switch designed to enable the user to manually select the desired flow rate or overrun timer duration.

Key Benefits

- Wireless controller
- 3 separate ventilation flow rate options to select in 1 controller
- 3 temporary high speed activation settings (30 / 60 / 90 minutes)
- Service and Maintenance alert and filter reset

Technical Specification

Mounting options	Surface
Supply voltage	Powered by a coin cell lithium battery (type: CR 2032)
IP rating	IP30
RAL colour	9010
Maximum number per unit	99
Communication with the Zehnder EVO unit	Wireless, via two-way RF - 868 MHz RF protocol

Dimensions (surface mounted)

Height	84 mm
Width	84 mm
Depth	15 mm

EVO Sense

Product code: 471 100 018



The Zehnder EVO Sense is a four position switch designed to enable the user to manually select the desired ventilation systems flow rate and provide system notifications

Key Benefits

- 4 separate ventilation flow rate options to select in 1 controller
- 7 day flow rate programmer
- Summer bypass indicator
- Service and Maintenance alert
- Clock function
- User menu access
- Installer menu access

Technical Specification

Mounting options	Surface / Recessed
Supply voltage	Mains power - 230 V / single-phase / 50Hz
IP rating	IP44
RAL colour	9010
Maximum number per unit	1
Communication with the Zehnder EVO unit	Wireless, via two-way RF - 868 MHz RF protocol

Dimensions (recessed)

Height	84 mm
Width	84 mm
Depth	12 mm

Dimensions (surface mounted)

Height	84 mm
Width	84 mm
Depth	53 mm

EVO CO2 sensor

Product code: 471 100 022



The Zehnder EVO CO2 wireless sensor and combined three position switch is designed to enable the user to manually select the desired ventilation systems flow rate based on the visual air quality indicator, or automatically adjust the unit relevant to the CO2 level for on demand control.

Key Benefits

- Green, yellow and red visual air quality indication light
- 3 separate ventilation flow rate options to select in 1 controller
- CO2 measuring range 400-2000 ppm
- Two modes available, COMFORT to adjust based on the ppm and ECO to increase the target value by 250 ppm

Technical Specification

Mounting options	Surface
Supply voltage	Mains power - 230 V / single-phase / 50Hz
IP rating	IP30
RAL colour	9010
Maximum number per unit	99
Communication with the Zehnder EVO unit	Wireless, via two-way RF - 868 MHz RF protocol
Accuracy	± 10% ppm @ 22 °C
Stabilisation period after start-up	40 ppm + 2% of reading at 20 °C at 2 minutes

Dimensions (surface mounted)

Height	100 mm
Width	100 mm
Depth	25 mm

EVO Humidity sensor

Product code: 471 100 023



The Zehnder EVO Humidity wireless sensor and combined three position switch is designed to enable the user to manually select the desired ventilation systems flow rate, or automatically adjust the unit relevant to the humidity level for on demand control.

Key Benefits

- 3 separate ventilation flow rate options to select in 1 controller
- Humidity measuring range 0-100% RH
- Two modes available, Manual speed selection or AUTO for demand control

Technical Specification

Mounting options	Surface
Supply voltage	Powered by 2 x AA batteries
IP rating	IP30
RAL colour	9010
Maximum number per unit	99
Communication with the Zehnder EVO unit	Wireless, via two-way RF - 868 MHz RF protocol
Accuracy	0-10% and 90-100%: ± 7% 11-89%: ± 3%

Dimensions (surface mounted)

Height	100 mm
Width	100 mm
Depth	25 mm

EVO Connect ModBus

Product code: 471 100 020



The Zehnder EVO Connect ModBus allows connection of the EVO units or sensors to be connected to a BMS system. The connection to the EVO device is wireless via RF and wired to the BMS.

Key Benefits

- Select the various fan speeds in manual mode and/or set timing programs using the ModBus building automation systems
- View any system errors using the ModBus building management system
- Wireless communication with Zehnder EVO ventilation unit and any sensors (humidity and/or CO2) and RS485 communication with building management system
- Allows programming of the unit's parameters during start-up and control of ventilation speeds and settings during normal operation

Technical Specification

Mounting options	Surface
Supply voltage	5 - 24 VAC /DC (tolerance 5 V DC - 0%; 24 V AC + 20%)
IP rating	IP20
Recommended cable	1 Pairs, 3 Cores, 0.36 mm², Screened, 22 AWG. (up to 50 metres)
RAL colour	9003
Maximum number per unit	1
Communication with the Zehnder EVO unit	Wireless, via two-way RF - 868 MHz RF protocol
Connectors	RS485
Communication protocols	Modbus RTU

Dimensions (surface mounted)

Height	90 mm
Width	92 mm
Depth	31 mm

EVO Connect ModBus to KNX

Product code: 471 100 024



The Zehnder EVO Connect ModBus to KNX, together with the EVO Connect ModBus (sold separately), allows connection of the EVO units or sensors to be connected to a KNX system. The connection to the EVO device is wireless via RF and wired to the EVO Connect ModBus and BMS.

Key Benefits

- Select the various fan speeds in manual mode and/or set timing programs using the
- View any system errors using the ModBus building management system
- Wireless communication with Zehnder EVO ventilation unit and any sensors (humidity and/or CO2) and RS485 communication with building management system
- Allows programming of the unit's parameters during start-up and control of ventilation speeds and settings during normal operation

Technical Specification

Mounting options	Surface
Supply voltage	8-24 V AC / 12-35 V DC
IP rating	IP20
Recommended cable	J-Y(St)Y 2 x 2 x 0.8mm²
Zehnder KNX library available at	www.zehnder.co.uk
Maximum number per unit	1
Connectors	Two way KNX

Dimensions (surface mounted)

Height	90 mm
Width	92 mm
Depth	31 mm

Example of ceiling installation with Zehnder Air distribution elements

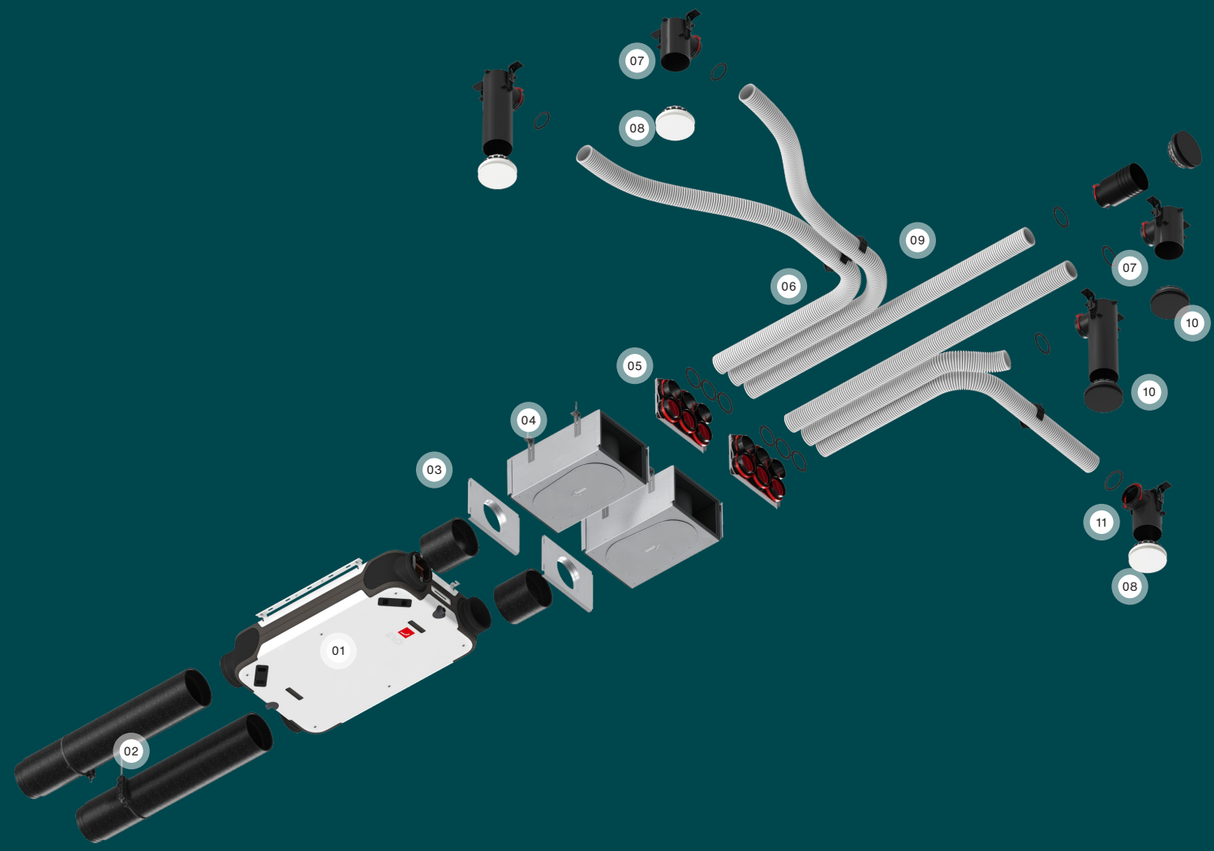

01 Zehnder EVO
Balanced ventilation unit

02 ComfoPipe Compact
Insulated duct connecting unit and external wall grids

03 End Plate ComfoWell

04 ComfoWell
Insulated silencer

05 Mounting Plate ComfoWell

06 ComfoTube DN90

07 TVA-P 2x90

08 ComfoValve Luna White

09 TVA-P 90 straight

10 ComfoVale Luna Black

11 TVA-P 1x90

For complete product advice and design assistance, contact us at +44 (0) 1276 605 800 or visit our website: www.zehnder.co.uk

Scan for more info

Zehnder Group UK Limited
Concept House, Watchmoor Point, Camberley, Surrey, GU15 3AD. United Kingdom
T +44 (0) 1276 605 800 ▪ enquiries@zehnder.co.uk ▪ www.zehnder.co.uk

ZG-EN-V0426-EVO-PBR, subject to change without notice